MENNEKES
MY POWER CONNECTION

Panel mounted receptacle

Part number: 3218

MENNEKES
Elektrotechnik GmbH & Co. KG

Aloys-Mennekes-Straße 1
57399 Kirchhundem
GERMANY

www.**MENNEKES**.org

Version Apr 11 2026 Subject to change without notice. No liability accepted for printing errors.

Product Description

- screw connection technology
- 20° inclination

Technical Details

Panel mounted receptacle	3218
Ampere	16A
Number of poles	4p
Clock position	12h
Nominal voltage AC	downstream from isolating transformer
Protection type IP	IP44
Contact carrier	standard
X-CONTACT	no
Connection	screw terminals
Contact screw drive	PZ2, slot
Pilot contact	without pilot contact
Pilot contact switch	no
Flange dimensions	100 x 92 mm
Hole spacings	85 x 77 mm
Insertion direction	angled
Inclination	20°
Highly resistant to chemicals	no
Military version	no
Tightening torque connection terminal for cable cross-section 1,0 - 1,5 mm^2	0.6 Nm
Tightening torque connection terminal for cable cross-section 2,5 - 4,0 mm^2	0.8 Nm
Tightening torque connection terminal for cable cross-section 6 - 10 mm^2	1.2 Nm
Strip length PH + N flexible conductor	8 - 10 mm
Strip length PE flexible conductor	12 - 17 mm
Strip length PH + N solid conductor	8 - 10 mm
Strip length PE solid conductor	12 - 17 mm

Panel mounted receptacle	3218
Conductor cross-section min.	1.5 mm^2
Conductor cross-section max.	4 mm^2
Weight (net)	186 g
Packaging unit	10 pcs
Quantity per pallet	1520 pcs
EAN / identification number	4015394018247

Permissible ambient conditions		
	Min.	Max.
Permissible ambient temperature	-25 °C	40 °C
Average temperature over 24 hours		35 °C

Material properties	
Housing	PA6 light grey [similar RAL 7035]
Hinged lid	PC light grey [similar RAL 7035]

Material resistance
The material resistance overview can be found on the website in the section “Knowledge” - “Product knowledge” - “Materials”.

Material and environmental properties	
RoHS 2011/65/EU incl. 2015/863/EU	✓
POP regulation (EU) 2019/1021	✓
Halogen-free	no

Regulations and Standards	
Norm	DIN EN IEC 60309-2
Declaration of Conformity	CE
Test label	EAC

Dimensional Drawing

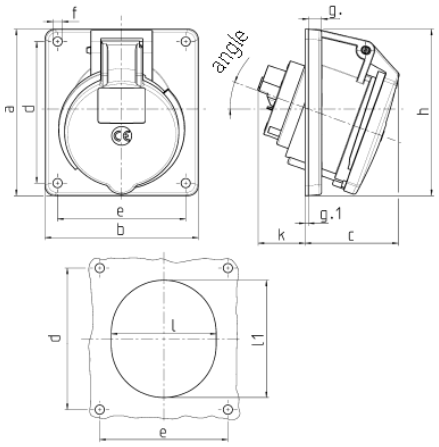

Drawing	Amp.	16			32		
1 MB 260	Poles	3	4	5	3	4	5
Dim. in mm	a	73.5	100	100	100	100	100
	b	64	92	92	92	92	92
	c	50	59	58	62	62	61
	d	60	85	85	85	85	85
	e	52	77	77	77	77	77
	f	5.5	5.5	5.5	5.5	5.5	5.5
	g.	7	8	8	8	8	8
	g.1	2	2	2	2	2	2
	h	79	100	100	103	103	106
	k	44	34	34	54	54	49
	l	52	55	65	67	67	72
	l1	60	63	72	82	82	85
	α	20°	20°	20°	20°	20°	20°
Terminal for cond. cross section (mm^2) min.-max.		1.5 —4	1.5 —4	1.5 —4	2.5 —10	2.5 —10	2.5 —10